TRANSFLUID®
industrial & marine

CERTIFIED ISO 9001

Bellmarine®
powered by Transfluid

ELECTRIC PROPULSION

Innovative energy system
for marine applications

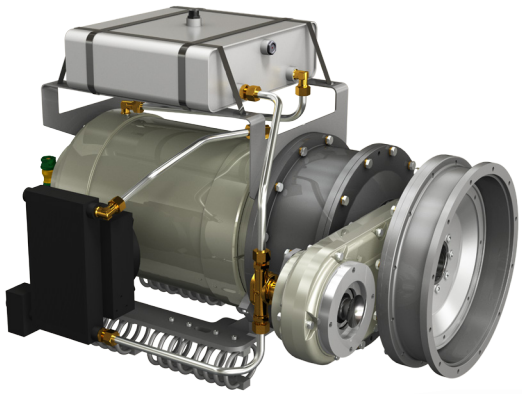

drive with us

Drive Master

Air cooling or Liquid cooling

TYPE	POWER kW	MOTOR	BATTERY Vdc	RPM
Ecoline	2.0	AC-30	24	1450
Ecoline	3.0	AC-30	48	1450
Ecoline	6.0	AC-50	48	1450
Cute	1.2	AC-10	24	1450
Ultimate	1.5	AC-10	48	1450
Ultimate	3.0	AC-30	48	1450
Ultimate	5.0	AC-30	48	1450
Ultimate	8.0	AC-50	48	1450
Ultimate	10	AC-50	48	1450
Ultimate (S2-30" / S1 12 kW)	15	AC-50	48	1450
Ultimate	15	AC-60	48	1450
Ultimate (S2-30" / S1 16 kW)	20	AC-60	96	1450
Ultimate	20	AC-80	48	1450
Ultimate	25	AC-80	96	1450
Ultimate (S2-25" / S1 16 kW)	25	AC-60	144	2500
Ultimate (S2-15" / S1 16 kW)	35	AC-60	144	3500
Ultimate	25	AC-80	144	1450
Ultimate	35	AC-80-L	144	1450
Ultimate (S2-15" / S1 35 kW)	50	AC-80-L	144	1850
Modular 30 kW continuously limited by controller	30/40	N80-2	48	1550
Modular	40	N80-2	96	1550
Modular	50	N80-2	144	1450

Air cooling Liquid cooling

Battery

VOLTAGE	100 Ah	200 Ah	400 Ah	600 Ah	800 Ah
	kWh				
51 Vdc	5.1	10.3	20.5	30.8	41
96 Vdc	9.6	19.2	38.4	57.6	76.8
153 Vdc	15.4	30.7	61.4	92.2	122.9
288 Vdc	28.8	57.6	115.2	172.8	230.4
384 Vdc	38.4	76.8	153.6	230.4	307.2

Acessories are available upon request

Torque Master Pro

Liquid cooling

TYPE	POWER kW	MOTOR	BATTERY Vdc	RPM
Master Pro	25	AC-80	96	800
Master Pro	30	AC-80	144	800
Master Pro	40	AC-80-L	144	950

Air cooling Liquid cooling

Sail Master

Air cooling or Liquid cooling

TYPE	POWER kW	MOTOR	BATTERY Vdc	RPM
Ecoline	3.5	AC-30	48	690
Ecoline	6.0	AC-50-S	48	690
Ultimate Compact	5.0	AC-50-S	48	1200
Ultimate	10	AC-50-S	48	1200
Ultimate	15	AC-50	48	750
Ultimate	20	AC-50	96	1300

Air cooling Liquid cooling

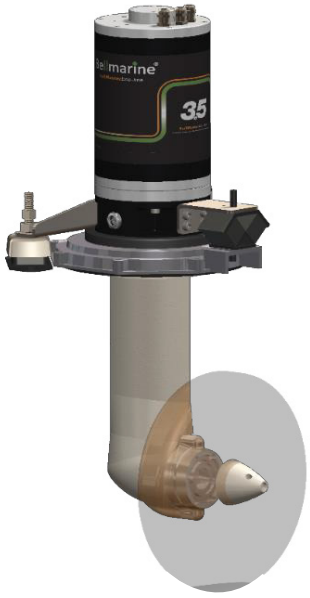

Outboard Master Pro

Air cooling or Liquid cooling

TYPE	POWER kW	MOTOR	BATTERY Vdc	RPM
Ecoline	6.0	AC-50	48	750
Ultimate	10	AC-50	48	750
Ultimate	15	AC-50	48	750
Ultimate	20	AC-50	96	1250

Air cooling Liquid cooling

Acessories are available upon request

TIER-G and EM with Stern Drive

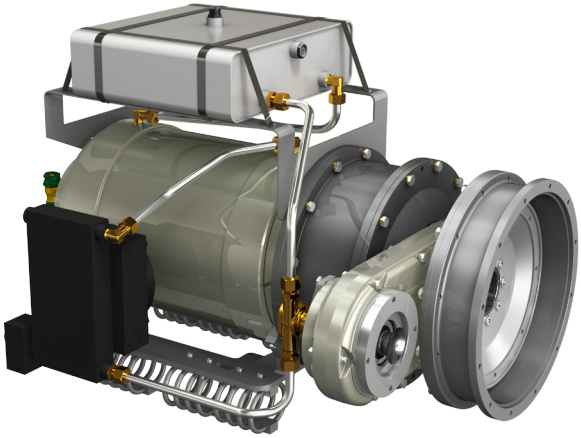

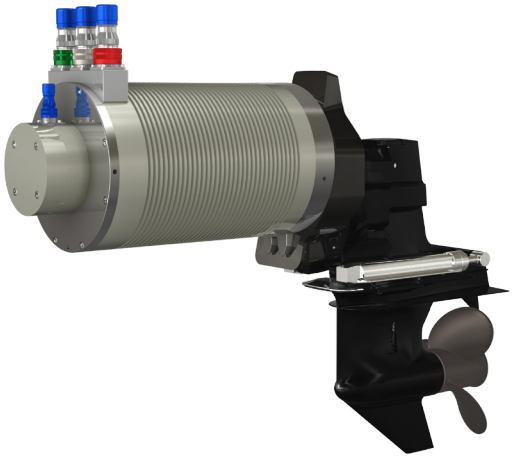

TYPE	POWER at 3000 rpm kW (hp)	NOMINAL TORQUE Nm (lbs-ft)	BATTERY Vdc	PICK POWER kW (hp)	TRANSMISSION	TRANSMISSION
EPS20	20 (27)	64 (47)	96	26 (35)	Marine gear	Stern drive
EPS35	35 (47)	111 (82)	288	45 (60)	Marine gear	Stern drive
EPS50	50 (67)	159 (117)	288	65 (87)	Marine gear	Stern drive
EPS75	75 (101)	239 (176)	288	97 (130)	Marine gear	Stern drive
EPS100	100 (134)	318 (235)	384	130 (175)	Marine gear	

Technical features, dimensions and any other data are not binding. Transfluid S.p.A. reserves the right to change then without notice

- Continuous power 100kW (134hp) and peak 130kW (174hp)
- Permanent magnet technology: 97% efficiency
- Power supply: 384 Vdc battery or 400 Vac network
- SAE 4-10 output (SAE J617-620) with SAE B power take-off
- Liquid cooling (glycol or water) – Temperature and pressure indicators

TRANSFLUID®
industrial & marine

HEADQUARTER - ITALY
TRANSFLUID S.p.A.
Via Guido Rossa, 4
21013 Gallarate (VA)
Ph. +39.0331.28421
Fax +39.0331.2842911
info@transfluid.it

CHINA
TRANSFLUID BEIJING TRADE CO.LTD
101300 Beijing
Ph. +86.1060442301-2
Fax +86.1060442305
tbtcinfo@transfluid.it

FRANCE
TRANSFLUID FRANCE s.a.r.l.
38110 Rochetoirin
Ph. +33.9.75635310
Fax +33.4.26007959
tffrance@transfluid.it

GERMANY
TRANSFLUID GERMANY GmbH
D-48529 Nordhorn
Ph. +49.5921.7288808
Fax +49.5921.7288809
tfgermany@transfluid.it

NETHERLAND
TRANSFLUID B.V.
NL-2801 DA ,Gouda
Ph. +31 (0)85 4868530
info@bellmarine.nl

RUSSIA
TRANSFLUID OOO
143100 Moscow
Ph. +7.495.7782042
Mob. +7.926.8167357
tfrussia@transfluid.it

U.S.A.
TRANSFLUID LLC
Auburn, GA 30011
Ph. +1.770.8221.777
Fax +1.770.8221.774
tfusa@transfluid.it

August 2018

www.transfluid.eu
www.buy-transfluid.com

drive with us